13.Cruise Control System

A: WIRING DIAGRAM

1. NON-TURBO MODEL

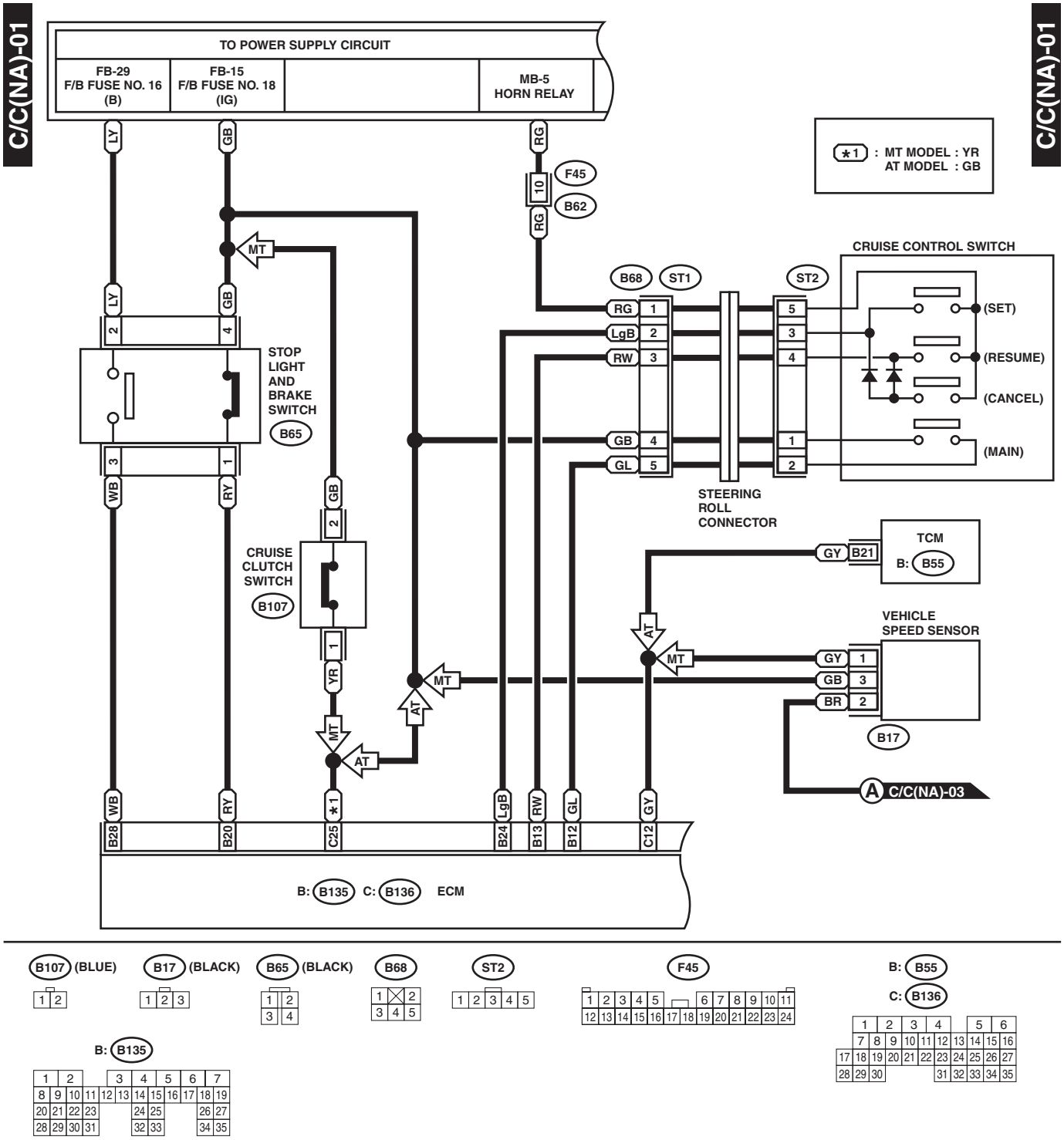

WI-14374

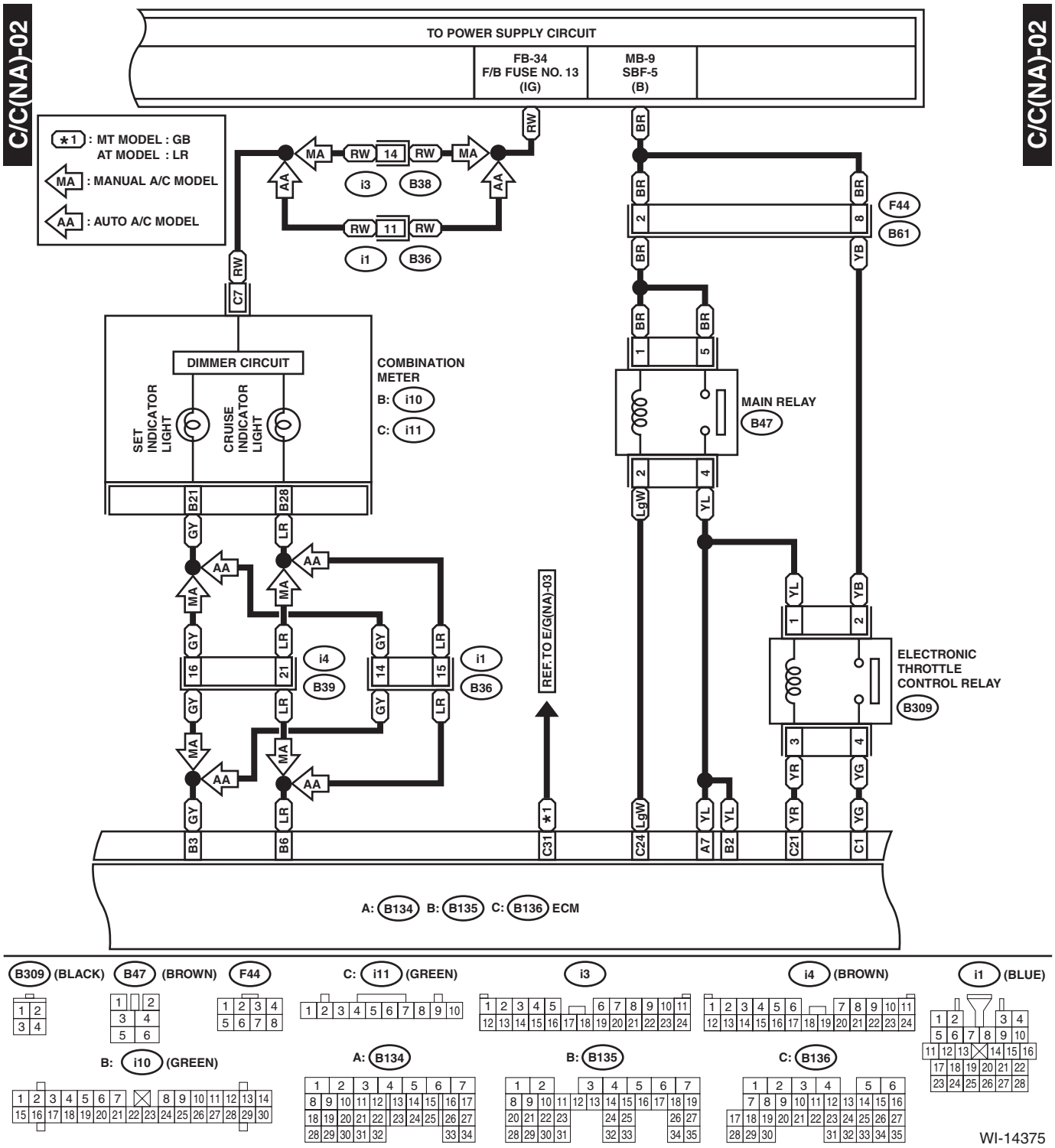
C/C(NA)-02
TO POWER SUPPLY CIRCUIT
FB-34
F/B FUSE NO. 13
(IG)
MB-9
SBF-5
(B)
*1 : MT MODEL : GB
AT MODEL : LR
MA : MANUAL A/C MODEL
AA : AUTO A/C MODEL
DIMMER CIRCUIT
COMBINATION METER
B: i10
C: i11
SET INDICATOR LIGHT
CRUISE INDICATOR LIGHT
MAIN RELAY
B47
ELECTRONIC THROTTLE CONTROL RELAY
B309
REF.TO E/G(NA)-03
A: B134 B: B135 C: B136 ECM
B309 (BLACK)
B47 (BROWN)
F44
C: i11 (GREEN)
i3
i4 (BROWN)
i1 (BLUE)
B: i10 (GREEN)
A: B134
B: B135
C: B136
WI-14375

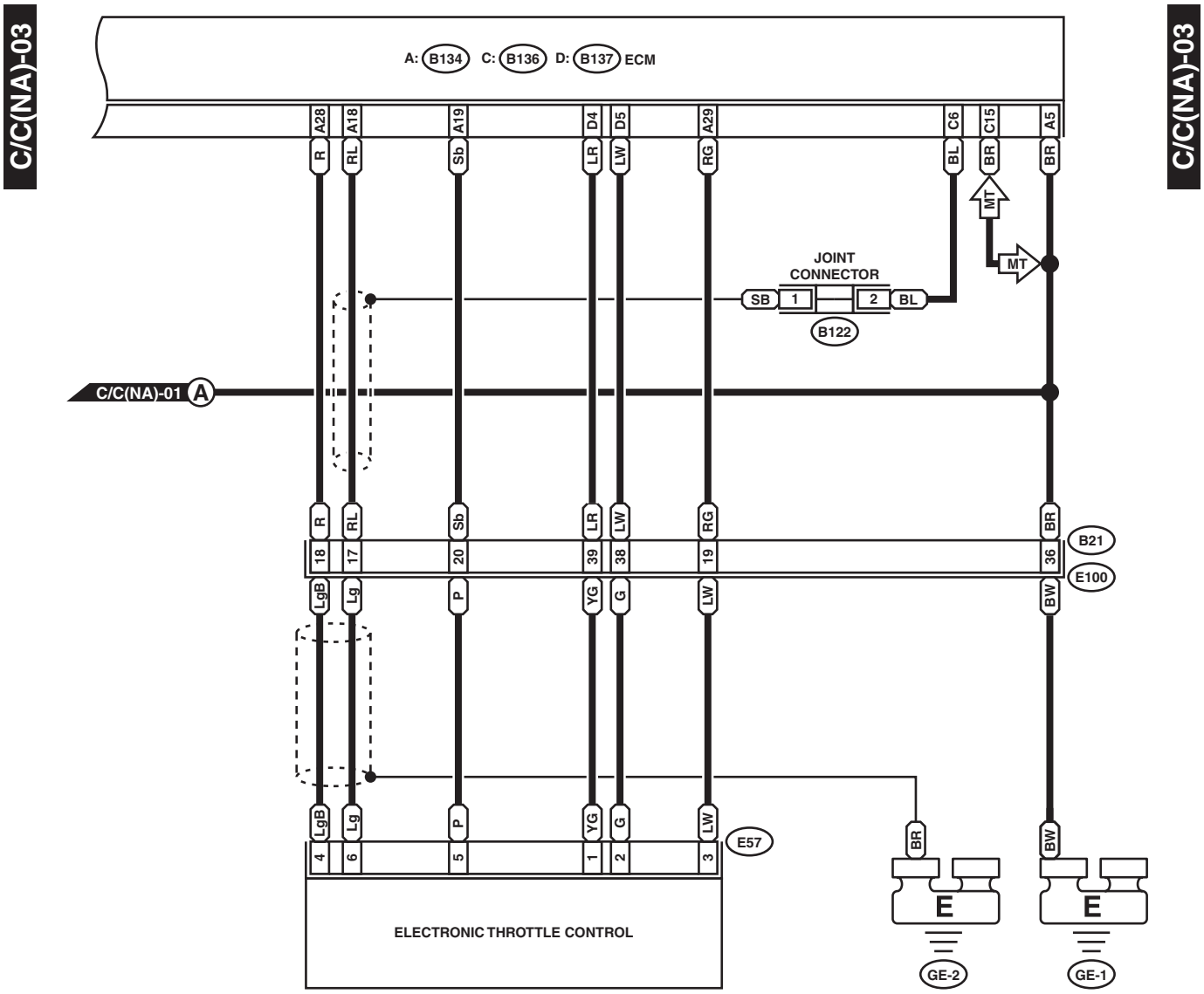
C/C(NA)-03
A: B134 C: B136 D: B137 ECM
A28 A18 A19 D4 D5 A29 C6 C15 A5
R RL Sb LR LW RG BL BR BR
MT
MT
JOINT CONNECTOR
SB 1 2 BL
B122
C/C(NA)-01 A
R RL Sb LR LW RG BR
18 17 20 39 38 19 36
B21
E100
LgB Lg P YG G LW BW
LgB Lg P YG G LW
4 6 5 1 2 3
E57
BR BW
E E
ELECTRONIC THROTTLE CONTROL
GE-2 GE-1
E57 (BLACK)
B122
B21 (BLACK)
A: B134
C: B136
D: B137
WI-14376

2. TURBO MODEL

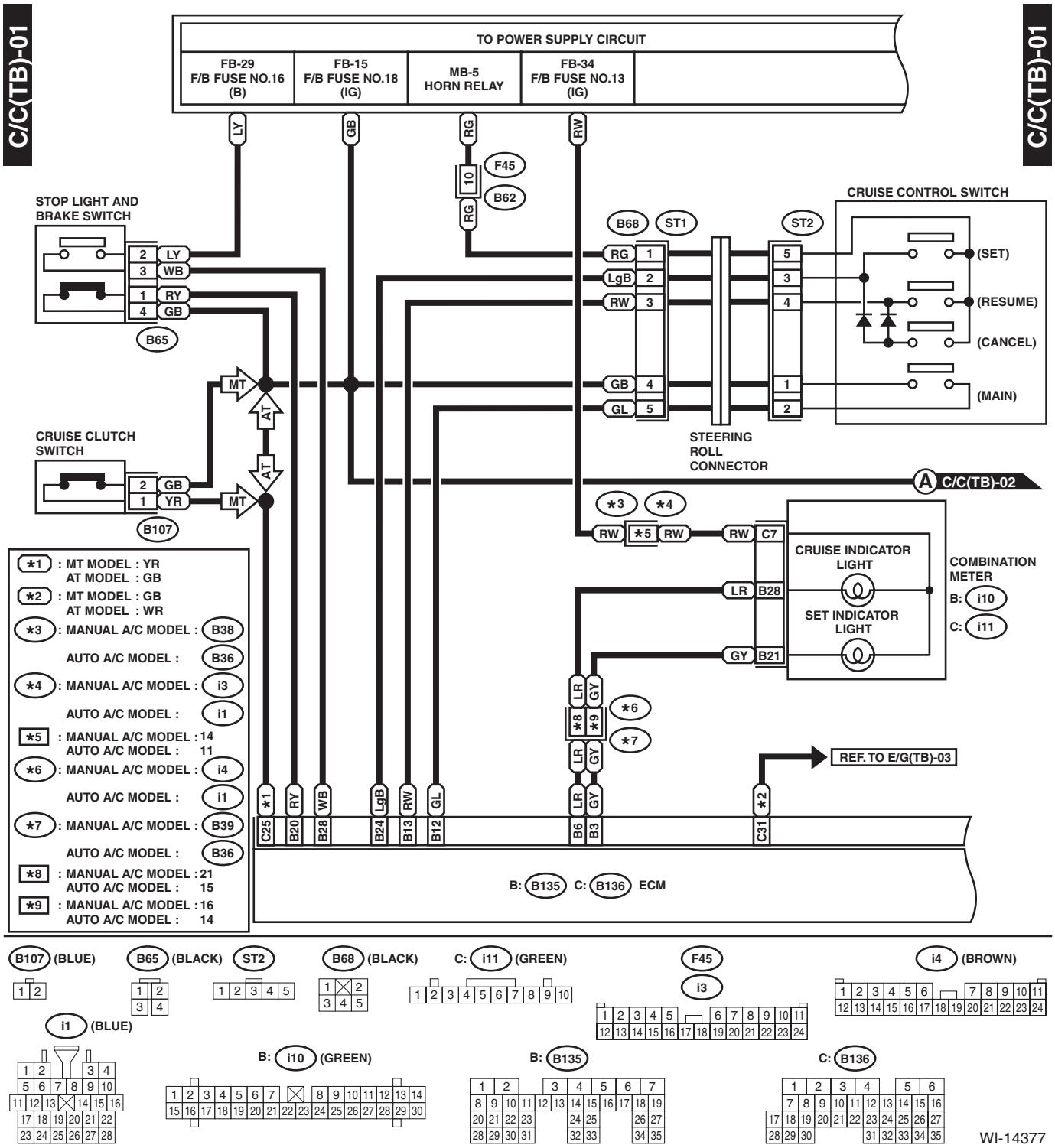

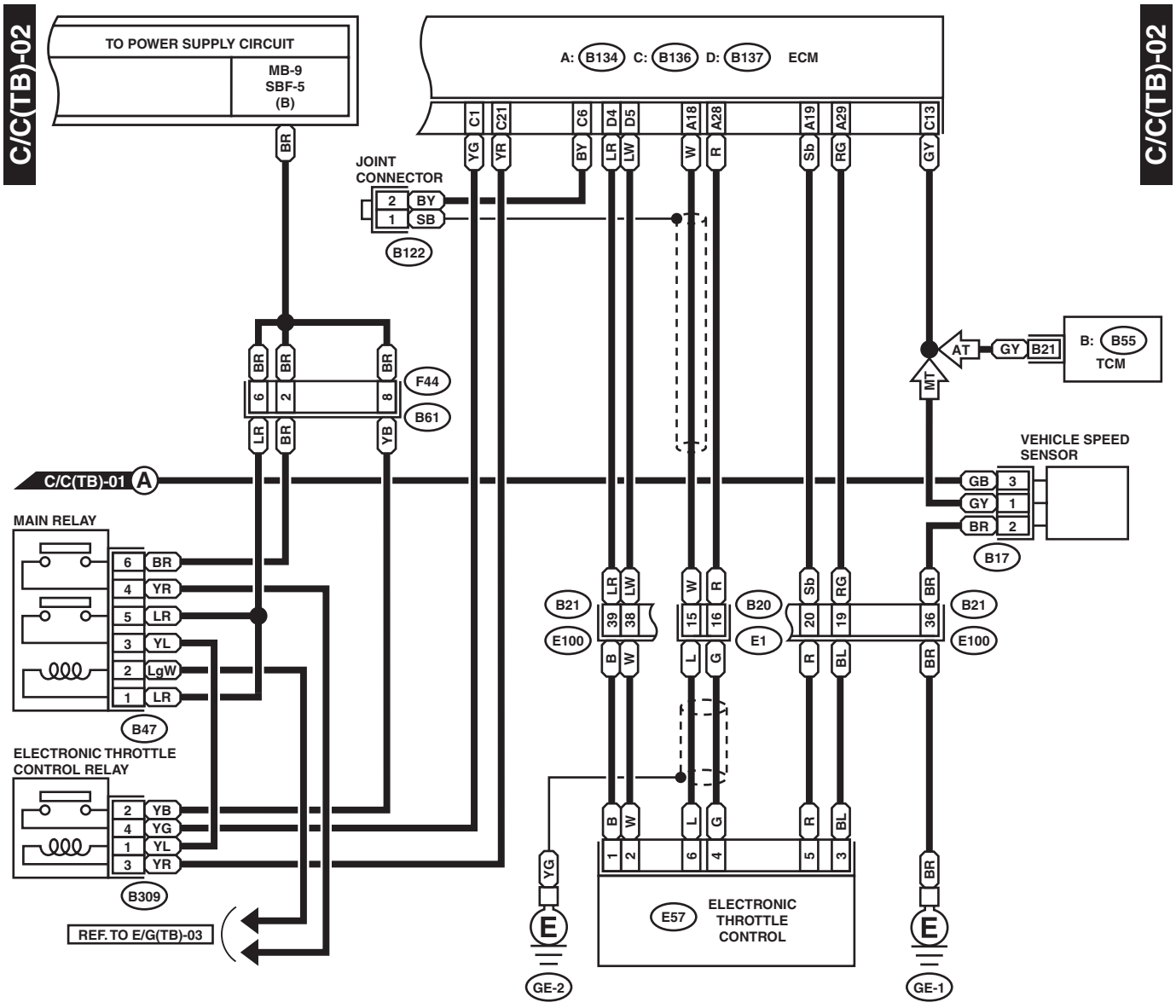
C/C(TB)-02
TO POWER SUPPLY CIRCUIT
MB-9
SBF-5
(B)
A: B134 C: B136 D: B137 ECM
C1 C21 C6 D4 D5 A18 A28 A19 A29 C13
YG YR BY LR LW W R Sb RG GY
JOINT CONNECTOR
2 BY
1 SB
B122
BR
F44
B61
6 2 8
LR BR YB
C/C(TB)-01 A
AT GY B21
B: B55
TCM
MT
VEHICLE SPEED SENSOR
GB 3
GY 1
BR 2
B17
MAIN RELAY
6 BR
4 YR
5 LR
3 YL
2 LgW
1 LR
B47
ELECTRONIC THROTTLE CONTROL RELAY
2 YB
4 YG
1 YL
3 YR
B309
REF. TO E/G(TB)-03
B21 E100
39 38
B20 E1
15 16
20 19 36
B E L G R BL
1 2 6 4 5 3
E57
ELECTRONIC THROTTLE CONTROL
GE-2
GE-1

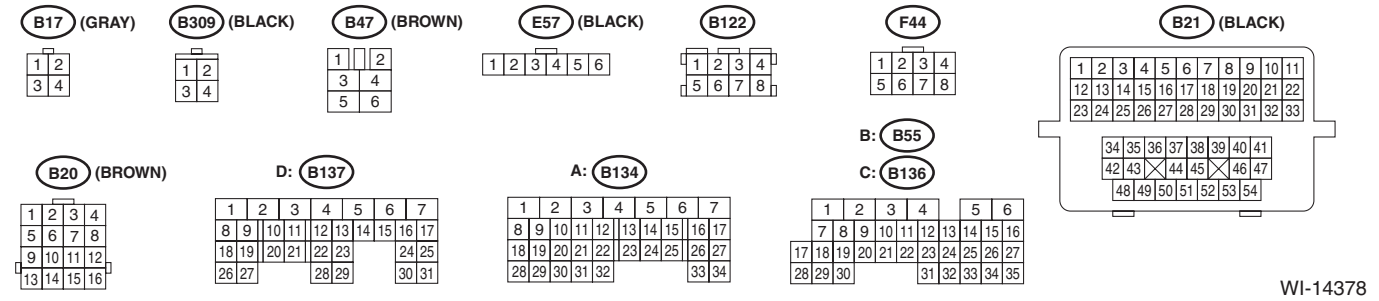
B17 (GRAY)
B309 (BLACK)
B47 (BROWN)
E57 (BLACK)
B122
F44
B21 (BLACK)
B20 (BROWN)
D: B137
A: B134
B: B55
C: B136
WI-14378

3. STI MODEL

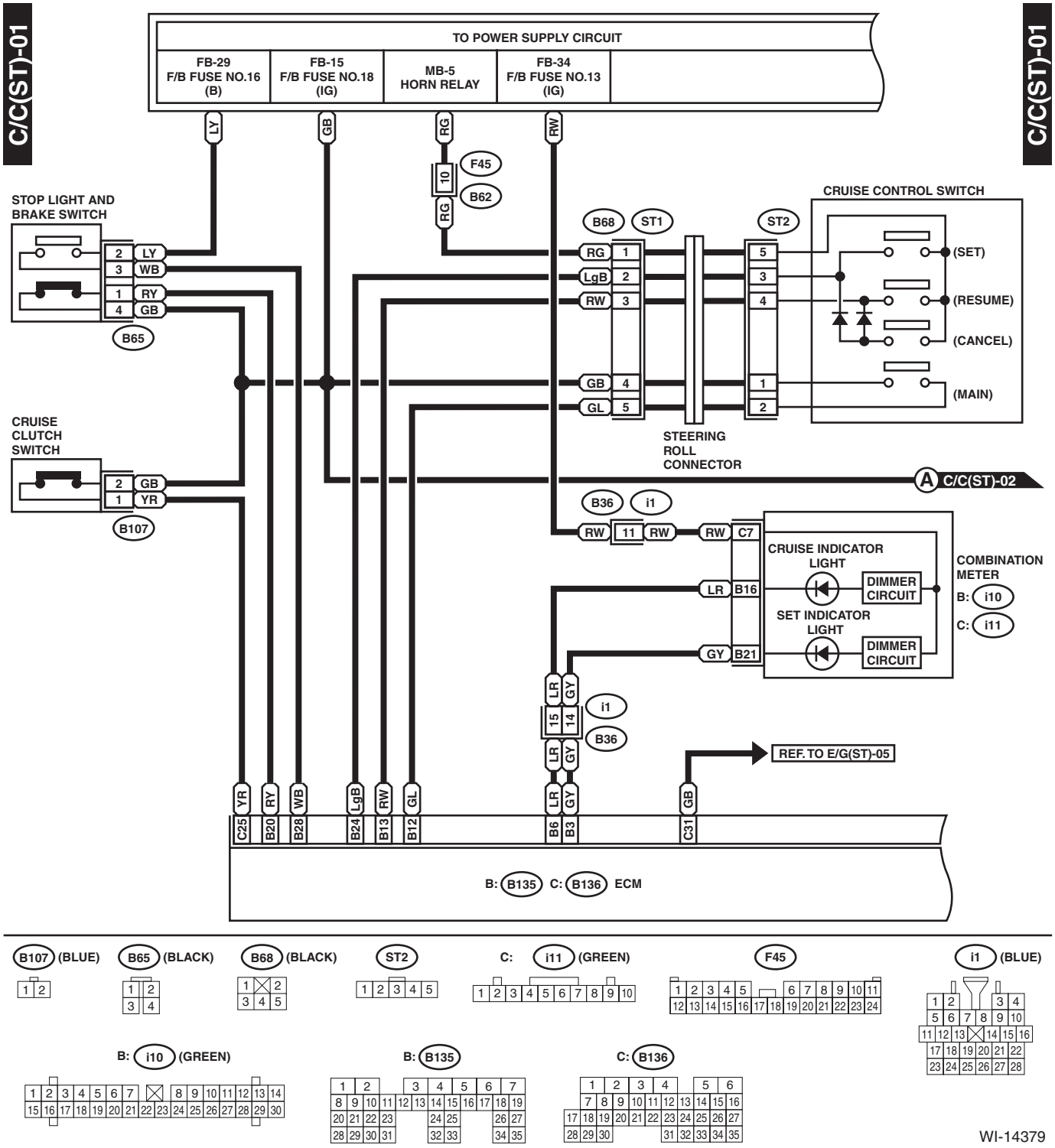
C/C(ST)-01
TO POWER SUPPLY CIRCUIT
FB-29 F/B FUSE NO.16 (B)
FB-15 F/B FUSE NO.18 (IG)
MB-5 HORN RELAY
FB-34 F/B FUSE NO.13 (IG)
STOP LIGHT AND BRAKE SWITCH
B65
CRUISE CLUTCH SWITCH
B107
F45
B62
B68
ST1
ST2
CRUISE CONTROL SWITCH
(SET)
(RESUME)
(CANCEL)
(MAIN)
STEERING ROLL CONNECTOR
A C/C(ST)-02
B36
i1
CRUISE INDICATOR LIGHT
SET INDICATOR LIGHT
DIMMER CIRCUIT
COMBINATION METER
B: i10
C: i11
REF. TO E/G(ST)-05
B: B135 C: B136 ECM

B107 (BLUE)
B65 (BLACK)
B68 (BLACK)
ST2
C: i11 (GREEN)
F45
i1 (BLUE)
B: i10 (GREEN)
B: B135
C: B136
WI-14379

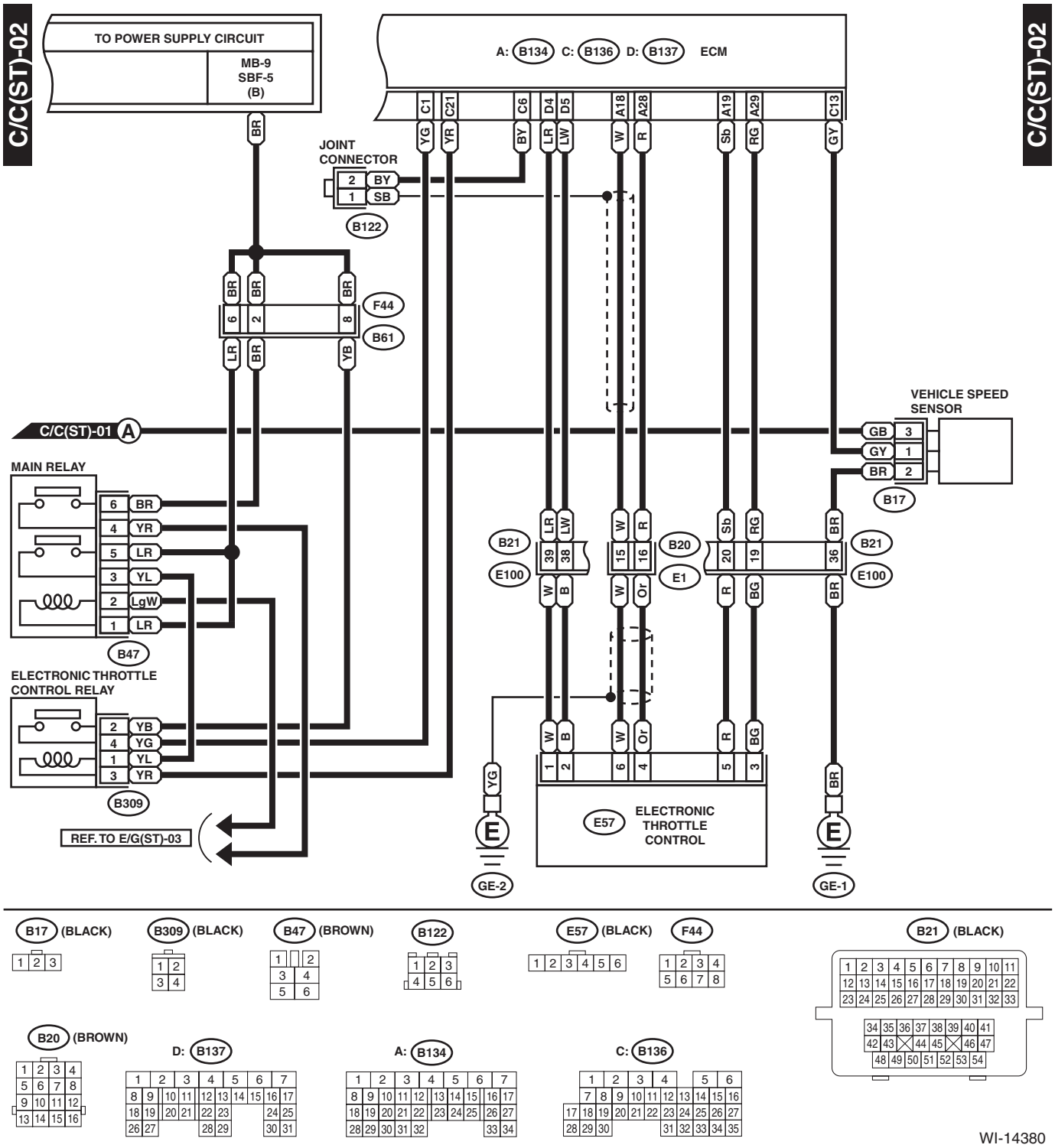
C/C(ST)-02
TO POWER SUPPLY CIRCUIT
MB-9
SBF-5
(B)
A: B134 C: B136 D: B137 ECM
JOINT CONNECTOR
B122
F44
B61
C/C(ST)-01 A
MAIN RELAY
B47
ELECTRONIC THROTTLE CONTROL RELAY
B309
REF. TO E/G(ST)-03
VEHICLE SPEED SENSOR
B17
B21
E100
B20
E1
E57
ELECTRONIC THROTTLE CONTROL
GE-2
GE-1
B17 (BLACK)
B309 (BLACK)
B47 (BROWN)
B122
E57 (BLACK)
F44
B21 (BLACK)
B20 (BROWN)
D: B137
A: B134
C: B136
WI-14380